CREATING A STANDARDIZED AND SIMPLIFIED CUTTING BILL USING GROUP TECHNOLOGY

Urs Buehlmann

Associate Professor
Department of Wood Science and Forest Products
Virginia Tech
Blacksburg, VA 24061-0503

Janice K. Wiedenbeck

Project Leader
Northern Research Station
USDA Forest Service, Forestry Sciences Laboratory
241 Mercer Springs Road
Princeton, WV 24740

R. Noble, Jr.

Assistant Professor
Department of Math/Statistics
Miami University of Ohio
Oxford, OH 45056

and

D. Earl Kline

Professor
Department of Wood Science and Forest Products
Virginia Tech
Blacksburg, VA 24061-0503

(Received October 2006)

ABSTRACT

From an analytical viewpoint, the relationship between rough mill cutting bill part requirements and lumber yield is highly complex. Part requirements can have almost any length, width, and quantity distribution within the boundaries set by physical limitations, such as maximum length and width of parts. This complexity makes it difficult to understand the specific relationship between cutting bill requirements and lumber yield, rendering the optimization of the lumber cutting process through improved cutting bill composition difficult.

An approach is presented to decrease the complexity of cutting bills to allow for easier analysis and, ultimately, to optimize cutting bill compositions. Principles from clustering theory were employed to create a standardized way to describe cutting bills. Cutting bill part clusters are part groups within the cutting bill's total part size space, where all parts are reset to a given group's midpoint. Statistical testing was used to determine a minimum resolution part group matrix that had no significant influence on yield compared to an actual cutting bill.

Iterative search led to a cutting bill part group matrix that encompasses five groups in length and four groups in width, forming a 20-part group matrix. The lengths of the individual part groups created vary widely, with the smallest group being only 5 inches in length, while the longest two groups were 25 inches long. Part group widths were less varied, ranging from 0.75 inches to 1.0 inch. The part group matrix approach allows parts to be clustered within given size ranges to one part group midpoint value without changing cut-up yield beyond set limits. This standardized cutting bill matrix will make the understanding of the complex cutting bill requirements-yield relationship easier in future studies.

Keywords: Rough mill, lumber yield, cutting bill standards, cluster theory.

Wood and Fiber Science, 40(1), 2008, pp. 29–41
© 2008 by the Society of Wood Science and Technology

INTRODUCTION

Cutting bills, among other factors, influence the yield obtained when cutting lumber into dimension parts (Buehlmann et al. 2003; 1999; 1998a; Buehlmann 1998; BC Wood Specialties Group 1996; Wengert and Lamb 1994). Manalan et al. (1980, p. 40) defined cutting bills as "*a schedule of dimension parts where any one of these parts can be cut out from this schedule during a given rough mill setup.*" Cutting bills are thus an aggregated list of parts to be cut in a rough mill. The term cutting bill requirements is used to refer to the quantity and part geometry characteristics of a given cutting bill (Buehlmann 1998).

Compared to other issues relating to rough mill operations such as cut-up technologies, lumber defect scanning systems, and others, cutting bill requirements and the relationship between cutting bill requirements and lumber yield are a little researched topic (Buehlmann et al. 2003). Only one major, comprehensive work describing cutting bill requirements for dimension part producers is widely known (Araman 1982; Araman et al. 1982). Reynolds and Chell in 1982 proposed a new system to produce dimension parts called "*Standard-size Hardwood Blanks.*" They suggested producing glued-up blanks using hardwood strips from which parts would be cut. To find optimal dimension for the hardwood blanks, Araman (1982) and Araman et al. (1982) analyzed 32 cutting bills used in industry from 5 different groups of dimension part producers, which were, respectively: (1) solid wood furniture, (2) veneered furniture, (3) upholstered furniture, (4) recliners, and (5) kitchen cabinets.

The cutting bill requirements-lumber yield relationship itself has not been researched in depth. However, it is widely acknowledged that the relationship of cutting bill and lumber yield is complex (Buehlmann 1998; Buehlmann et al. 2003; 1999; 1998a; BC Wood Specialties Group 1996; Wengert and Lamb 1994). Thomas (1997) correctly claims that yield optimization is complicated by the presence of a cutting bill. If a cutting bill forces a rough mill operation to cut specific quantities of each part, yield declines unless all parts are small in size (length and/or width), which is an unrealistic situation. Depending on the cutting bill requirements, the yield realized can be slightly or substantially lower than the yield level associated with cutting exclusively short and narrow parts. Estimating the influence of given cutting bill requirements is challenging, and no proven systems exist for this task except simulating the cut-up of lumber. Such cut-up simulation is done with software such as ROMI (Weiss and Thomas 2005), Opti2Axes (Caron 2003), Rip-X (Steele and Harding 1991), or CORY (Brunner et al. 1989). Thomas and Buehlmann (2002 and 2003) and Harding and Steele (1997) have shown that such simulation can be a valid representation of real rough mills and lumber yields achieved.

Rough mills generally are reluctant to cut to standard-size parts, as yield is inevitably reduced by so doing. However, from an analytical viewpoint, a standardized and simplified cutting bill could help simplify the theoretical research and introduce a standard for future work. Buehlmann et al. (2003, p. 199) point out the need to find "*ways to make cutting bills less complex, i.e. reduce the possible part combinations to a manageable number.*" Such a simplification of cutting bills would make it easier to gain a better understanding of the complex cutting bill—lumber yield relationship. Also, yield estimation without simulation could become possible. This study describes a method to create such a simplified representation of cutting bill requirements by using standard part groups.

HYPOTHESIS

The most basic definition of cutting bill requirements is comprised of three dimensions: a) part length (L), b) part width (W), and c) part quantity (Q) (Buehlmann 1998). Additional dimensions, such as part quality (Q) or part thickness (T), are not considered in this study. Each of these dimensions (L, W, Q) can take on any number of possible discrete values within physical boundaries. Holding all other lumber cut-up parameters constant, these three dimensions influence yield, although not linearly or in any

known pattern (Buehlmann 1998; Buehlmann et al. 2003). It is known that marginal changes in length and width of parts do, within limits, have only a marginal influence on yield. The hypothesis then is:

> Part lengths and part width groupings can be established within which changes in part lengths and widths have an influence on yield that is not statistically significant at the 0.01 level of significance.

If the hypothesis is found to be true, cutting bills could be described by a fixed number of standard part lengths and widths with part quantity the only variable. Such a set-up could potentially lead to a simplified way of estimating yield and analyzing the cutting bill requirements-lumber yield relationship.

METHODS

To create a standardized, simplified cutting bill able to represent "real" cutting bills as closely as possible in terms of yield, it was necessary to first establish minimum and maximum part sizes used in industry. Also, part quantities for individual part sizes were found such that they would reflect average values observed in industrial operations.

Part groups, e.g., the ranges of part lengths and widths within which marginal changes in length or width do not have a statistically significant influence on yield, are a theoretical concept used to create a framework to describe "real" cutting bills in a standardized format. Buehlmann et al. (2003) used a similar methodology in their study about the influence of part size and quantity changes on yield. However, in that study the concept of part groups was used only as a way to create a framework for a cutting bill; it was not concerned about creating a simplified, standardized cutting bill.

Rip-first rough mill yield simulation

ROMI-RIP 1.0, the USDA Forest Service's rip-first rough mill simulator (Thomas 1995a and 1995b) was used to simulate the cut-up of lumber. While the USDA Forest Service has released more user-friendly rough mill simulators having more cut-up options (Thomas and Weiss 2006; Weiss and Thomas 2005) the simplicity of ROMI-RIP 1.0 did not constrain this study. To avoid biasing the results owing to systems constraint, the simulation set-up chosen included: (1) all-blades-movable arbor, (2) dynamic exponential cutting bill part prioritization (Thomas 1996b), (3) smart salvage operation (Thomas 1996a), (4) no excess salvage but unlimited salvage operations (Anderson et al. 1992), (5) no random width and no random length parts, (6) no fingerjointed or glued-up parts, (7) continuous update of part counts, (8) ¼ inch end and side trim on both sides, and (9) clear-two-side (C2F) parts only. Yield, consisting of primary and smart salvage yield, is reported in absolute terms unless specified otherwise.

Lumber

Number 1 Common red oak was used in this study due to its importance to the solid wood furniture industry (Hansen et al. 1995; Luppold 1993; Meyer et al. 1992). Red oak is the most widely researched species in respect to lumber cut-up (Wiedenbeck 1992; Gatchell et al. 1998; Buehlmann et al. 1999 and 1998a) and a well-built and documented databank, Gatchell et al.'s 1998 Kiln-Dried Red Oak Data Bank (1998), is available for simulation. Lumber graded No. 1 Common is the preferred grade with more than 50 percent market share (Hansen et al. 1995; Sinclair et al. 1989). Four-quarter-inch board thickness is mostly used for dimension parts (Araman et al. 1982).

The lumber sample was prepared using the board size distribution by Wiedenbeck et al. (2003); the number of boards in each lumber sample was greater than 150 (Buehlmann et al. 1998a). The "custom datafile creation" feature of ROMI-RIP (Thomas 1995a and 1995b) makes creating such defined lumber samples straightforward.

Cutting bill

Cutting bills, as they are used in the solid hardwood furniture and components industries,

specify part sizes (length [L] and width [W]), and part quantities (Q). Part thickness (T) is kept uniform within any given cutting bill. The length, width and part quantity specifications in a cutting bill are referred to as cutting bill requirements in this study (Buehlmann 1998). Buehlmann characterized the distribution of part lengths and widths using an analysis of 40 cutting bills obtained from industry and literature. Overall, more than 90 percent of solid wood parts required by the cutting bills analyzed were found to range between 5 and 85 inches in length and 1.00 and 4.75 inches in width (Buehlmann 1998). These length and width ranges, therefore, were made the size boundaries for cutting bill parts in this study. Part quantities were established using work done by Araman et al. (1982).

Part groups

Since large quantities of different part sizes cannot be easily handled and analytically modeled, the concept of part groups was used to reduce the number of possible cuttings to a smaller more manageable level. Part groups divide the length (5–85 inches) and width range (1.00–4.75 inches) of part sizes found in cutting bills into finite groups. Parts specified by the cutting bill are clustered within these size-based groups. The midpoint of each group is used as the representative size for all parts falling within a given group, thus simplifying cutting bills for analytical purposes.

Preliminary testing showed that a minimum of 20 part groups (five length groups and four width groups) were necessary to have parts clustered such that clustering causes no significant impact on yield. Thus, the length range of parts (i.e. 5 to 85 inches) was divided into five segments of equal length of 16 inches ([85–5]/5). The width range was divided into four segments, three of them 1.00 inch and one 0.75 inches in width. This uneven size of the part group width ranges was necessary to accommodate ROMI-RIP's (Thomas 1995a and 1995b) quarter-inch part size increments. Part quantities for each part group were calculated based on Araman et al.'s (1982) study by allocating part quantities as a percentage of the total requirement (Buehlmann 1998).

Araman et al.'s (1982) work is thought to be the most thorough study of part quantity requirements for parts used by furniture producers. The four-quarter thickness part lengths and widths in Araman et al. (1982, Table 3) include length and width distributions for solid wood furniture parts based on data collected from 20 furniture producers. Araman et al.'s part distribution analyses, to be useful, had to be adapted to this study. For example, the range of lengths listed by Araman et al. was 0 to 100 inches. The widths ranged from 0 to "*bigger than 5*" inches. The study presented here has a length range of 5 to 85 inches and a width range of 1.00 to 4.75 inches. Assuming a uniform distribution of quantities in Araman et al.'s work, part quantity requirements were normalized to fit the limitations imposed for the part groups used in this study (Buehlmann 1998).

Table 1 shows the preliminary part group distribution created, including part sizes and the percentage of quantity requirements for each of the part groups in the preliminary cutting bill. The width (W) ranges of individual part groups are indicated in the leftmost column; whereas length (L) ranges are shown in the second row.

TABLE 1. *Preliminary part groups with part quantity distribution in percent.*

	Length (inch)				
Width (inch)	$5 = <L_1 <= 21$ [13.0]	$21 < L_2 <= 37$ [29.0]	$37 < L_3 <= 53$ [45.0]	$53 < L_4 <= 69$ [61.0]	$69 < L_5 <= 85$ [77.0]
$1.00 = <W_1 < 2.00$ [1.50]	L_1W_1 {14.3%}	L_2W_1 {12.4%}	L_3W_1 {4.8%}	L_4W_1 {2.9%}	L_5W_1 {1.5%}
$2.00 = <W_2 < 3.00$ [2.50]	L_1W_2 {14.8%}	L_2W_2 {13.5%}	L_3W_2 {5.2%}	L_4W_2 {3.3%}	L_5W_2 {1.4%}
$3.00 = <W_3 < 4.00$ [3.50]	L_1W_3 {5.9%}	L_2W_3 {6.1%}	L_3W_3 {2.4%}	L_4W_3 {1.2%}	L_5W_3 {1.3%}
$4.00 = <W_4 <= 4.75$ [4.25]	L_1W_4 {3.7%}	L_2W_4 {3.3%}	L_3W_4 {1.2%}	L_4W_4 {0.4%}	L_5W_4 {0.3%}

Each of the 20 part groups are designated L_xW_y where each group is identified by the subscript x for length and y for width, where x = 1, 2, 3, 4, 5 and y = 1, 2, 3, 4. For example, the dimension of the part with the designation L_1W_1 has a length range of 16.0 inches and a width range of 1.00 inch. The numbers in rectangular brackets indicate the part group midpoint, e.g., the geometrical size (length/width) of the part representing this particular part group. Part quantity, as calculated using Araman et al's (1982) study, is indicated in brackets behind the part group designation. The part quantity required for part group L_1W_1 thus is 14.3 percent of all the parts required by the cutting bill.

Part groups allow clustering of all parts that fall within a specified part group size range. For example, if a part group's size range is 5 to 21 inches in length and 1.00 to 2.00 inches in width (i.e. part group L_1W_1), then all parts that are between 5 and 21 inches long and between 1.00 and 2.00 inches wide belong to this group. The midpoint of this part group (i.e. 13.0 inches in length and 1.50 inches in width) represents all those parts that fall within this particular part group. In other words, a particular part group's midpoint is thought to represent all parts having sizes that fall within this part group's size range. In this way, the number of different part sizes to be handled for analytical purposes can be reduced significantly.

Part group size determination

It is rational to expect that clustering of parts within part groups changes the cutting bill's yield. However, the change in yield should be minor if part group sizes can be created where yield changes due to clustering are insignificant. Those part group sizes have to be determined by way of iterative, statistical testing using the following methodology. Figure 1 graphically shows the representation of a particular part group (L_xW_y) with its midpoint (0,0) and the four extreme points (±1, ±1) at the part group corners. For example, for testing, the part group midpoint of part group L_1W_1 will assume five sizes based on the part group ranges described in

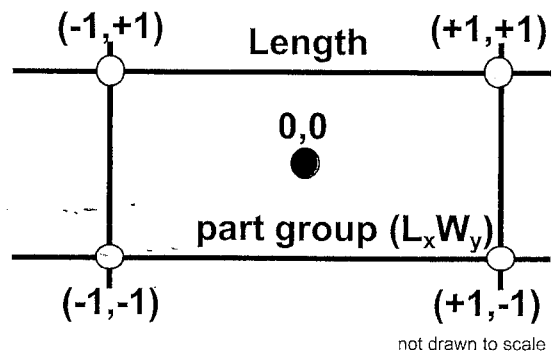

FIG. 1. Midpoint (0,0) and extreme points (±1, ±1; corners of the part group) used to test for maximum influence of part group range on yield.

Table 1 that correspond with the four extreme positions and the midpoint shown in Fig. 1:

Position 0, 0: $L_{1(0)} = 13$, $W_{1(0)} = 1.50$
(this is the original midpoint position)
Position −1, −1: $L_{1(-1)} = 5$; $W_{1(-1)} = 2.00$
Position +1, −1: $L_{1(+1)} = 21$; $W_{1(-1)} = 2.00$
Position +1, +1: $L_{1(+1)} = 21$; $W_{1(+1)} = 1.00$
Position −1, +1: $L_{1(-1)} = 5$; $W_{1(+1)} = 1.00$

For all other part groups, midpoint values were maintained at their original postions except for the ones that lie in the same row (L_2W_1, L_3W_1, L_4W_1, L_5W_1) or in the same column (L_1W_2, L_1W_3, L_1W_4) as the part group (L_1W_1) under consideration. The midpoints of part groups in the same row or same column take on the same lengths or widths as the point of the part group under consideration. In this way, the number of different part sizes to be cut does not change and does thus not affect yield (Buehlmann 1998). Thus, when testing L_1W_1, the other parts in this cutting bill would have the following dimensions in length and width as shown in Table 2.

Statistical determination of influence of part group on yield

The method described above is used to create cutting bills that are needed to test the influence of extreme midpoint positions (e.g. part sizes) for individual part groups on yield. To make the

TABLE 2. *Five cutting bills used to test influence of part group L_iW_j on length.*

			Position 0, 0		Position −1, −1		Position +1, −1		Position +1, +1		Position −1, +1	
#	Part group	Quantity	Length	Width	Length	Width	Length	Width	Length	Width	Length	Width
1	L_1W_1	143	13.0*	1.50*	5.0*	2.00*	21.0*	2.00*	21.0*	1.00*	5.0*	1.00*
2	L_2W_1	124	29.0	1.50*	29.0	2.00*	29.0	2.00*	29.0	1.00*	29.0	1.00*
3	L_3W_1	48	45.0	1.50*	45.0	2.00*	45.0	2.00*	45.0	1.00*	45.0	1.00*
4	L_4W_1	29	61.0	1.50*	61.0	2.00*	61.0	2.00*	61.0	1.00*	61.0	1.00*
5	L_5W_1	15	77.0	1.50*	77.0	2.00*	77.0	2.00*	77.0	1.00*	77.0	1.00*
6	L_1W_2	148	13.0*	2.50	5.0*	2.50	21.0*	2.50	21.0*	2.50	5.0*	2.50
7	L_2W_2	135	29.0	2.50	29.0	2.50	29.0	2.50	29.0	2.50	29.0	2.50
8	L_3W_2	52	45.0	2.50	45.0	2.50	45.0	2.50	45.0	2.50	45.0	2.50
9	L_4W_2	33	61.0	2.50	61.0	2.50	61.0	2.50	61.0	2.50	61.0	2.50
10	L_5W_2	14	77.0	2.50	77.0	2.50	77.0	2.50	77.0	2.50	77.0	2.50
11	L_1W_3	59	13.0*	3.50	5.0*	3.50	21.0*	3.50	21.0*	3.50	5.0*	3.50
12	L_2W_3	61	29.0	3.50	29.0	3.50	29.0	3.50	29.0	3.50	29.0	3.50
13	L_3W_3	24	45.0	3.50	45.0	3.50	45.0	3.50	45.0	3.50	45.0	3.50
14	L_4W_3	12	61.0	3.50	61.0	3.50	61.0	3.50	61.0	3.50	61.0	3.50
15	L_5W_3	13	77.0	3.50	77.0	3.50	77.0	3.50	77.0	3.50	77.0	3.50
16	L_1W_4	37	13.0*	4.25	5.0*	4.25	21.0*	4.25	21.0*	4.25	5.0*	4.25
17	L_2W_4	33	29.0	4.25	29.0	4.25	29.0	4.25	29.0	4.25	29.0	4.25
18	L_3W_4	12	45.0	4.25	45.0	4.25	45.0	4.25	45.0	4.25	45.0	4.25
19	L_4W_4	4	61.0	4.25	61.0	4.25	61.0	4.25	61.0	4.25	61.0	4.25
20	L_5W_4	3	77.0	4.25	77.0	4.25	77.0	4.25	77.0	4.25	77.0	4.25

* Indicates the part size adapted to the test methodology described.

yield differences between individual observations independent of the absolute yield-level, yield changes were measured using statistical analysis. The five observations for each part group (2 replicates) were fit to the following general linear model (Montgomery 2005):

$$Y_{xy} = l_x + w_y + (lw)_{xy} + \text{curvature} \qquad (1)$$

where Y_{xy} is the average yield (two replicates) by simulating the cut-up of the nth cutting bill testing part group xy with the part group's midpoint value set at one of the five possible positions. The average yield for the short-length level is designated l_1, l_2 is the average yield at the long length level, w_1 is the average yield at the narrow-width level, and w_2 is the average yield at the wide width level.

L_x checks for significant changes in yield due to changes in length and w_y the same for width. The third term (l_xw_y) tests for a significant interaction between length and width. The curvature term assures that the yield surface in a part group is flat over the entire surface, e.g. that the yield at the midpoint setting lies in a plane with all the other four yield results of a given part group. Figure 2 graphically depicts this concept: Fig. 2a shows a yield surface where the yield at the midpoint does not lie in the same plane as the other four (part group corner) points tested, whereas Fig. 2b displays a midpoint that lies on the same yield plane with the four part group corner points. Figure 2 actually illustrates how a shrinking part group length (from 5.0 to 20.0 inches (graph a) to 5.0 to 15.0 inches (graph b) decreases the influence of clustering on yield. Actually, b) is the final part group L_1W_1. Testing occurred for part groups L_1W_1, L_2W_1, L_3W_1, L_4W_1, L_5W_1 in length and thereafter L_5W_2, L_5W_3, L_5W_4 in width. The remaining 12 part groups were not tested because their influence on yield was assumed smaller compared to the part groups tested. The level of significance for these tests was set at $\alpha = 0.01$. Each test was replicated twice.

These tests also were used to observe the maximum yield difference between any two of the five yield results obtained in testing each individual part group. The term "yield span" (Buehlmann 1998, introduced here and henceforth used throughout the study) denotes the

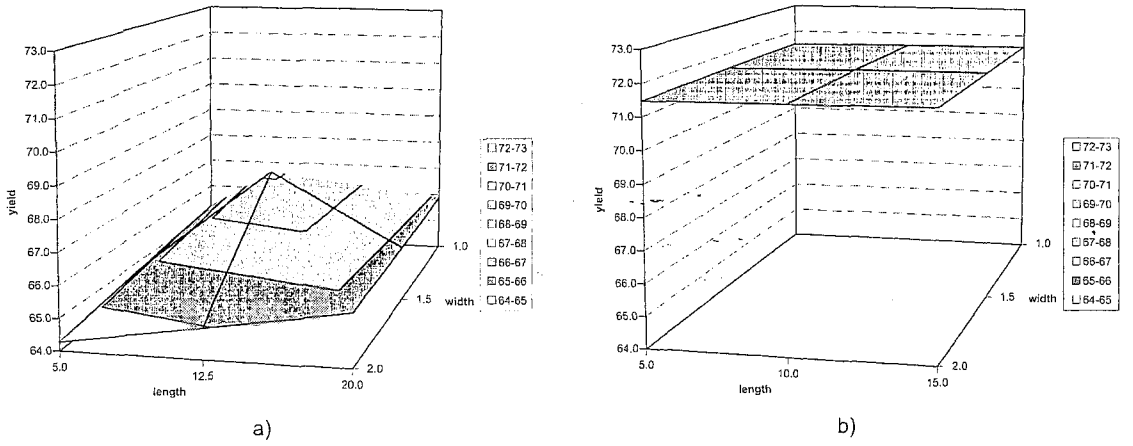

FIG. 2. Yield at part group midpoint not lying in the same plane of resulting yield of part group corners (a) and yield at part group midpoint lying in the same plane of resulting yield of part group corners (b).

maximum absolute yield difference between any two of the five tests done for a particular part group (i.e. the difference between the maximum and minimum yield level). The yield span gives insight to the level of absolute yield variance that occurs within a specific part group due to changes in the position of the midpoint; i.e., the yield deviation that possibly could accrue due to the clustering of parts to the part group midpoint.

Adjusting part group sizes

Once the influence of the size of parts in a particular group on yield was established, rules as to how to adjust the size of any part group that did not conform to the minimum level of significance had to be developed. Testing of part groups was conducted starting with length from shortest to longest (L_xW_1, where x = 1, 2, 3, 4, 5), using the narrowest part group width (W_1). The narrower widths tend to influence yield less than the wider ones (Buehlmann et al. 2003). After successfully establishing maximum lengths for all part groups, testing was done proceeding from widest to narrowest width (L_5W_y, where y = 1, 2, 3, 4) using the longest length (L_5) because the influence of width on yield is more pronounced when parts are long.

The decision tree to adjust length based on the tests for length was as follows:

Step 1:
- Is curvature significant?
- if yes, shorten length, rerun simulation, and start step 1 again
- if no, go to step 2

Step 2:
- Is L_iW_j significant?
- if yes, shorten length, rerun simulation, and start with step 1 again
- if no, go to step 3

Step 3:
- Is L_i significant?
- if yes, shorten length, rerun simulation, and start with step 1 again
- if no, check W_j

Step 4:
- Is W_j significant?
- if yes, shorten length, rerun simulation, and start with step 1 again
- if no, enlarge part group length and procedure starts at step 1, if enlarged part group violates any of the above rules, then part group size is determined

Initially, the increments for changing the part group sizes were set at 2.5 inches in length and 0.25 inches in width. However, the incremental change in length was implemented as a 2-inch change followed by a 3-inch change, so that the length of the part group was an integer and two subsequent changes always equaled 5 inches.

In the case that the size of the part group

under consideration had to be made smaller or larger, the sizes of all other 19 part groups had to be adjusted accordingly (Buehlmann 1998). Moreover, whenever part group sizes were changed, the part quantities belonging to each part group were recalculated based on the distribution in Araman et al. (1982).

RESULTS

Obtaining the final part group matrix that conformed to the requirements set forth required extensive iterative testing. Testing for the part group's size was started with part group L_1W_1. The preliminary part groups and part group quantities shown in Table 1 were used for the first test. Employing the methods described, the final part group matrix was established.

The following paragraph illustrates in detail an example of how the size of one part group was found. Because group L_2 required the most complex processing to arrive at an acceptable group size, this part group's tests will be presented. Before being able to establish the size for group L_2, the size of group L_1 had to be determined. The length range for L_1 that did not violate the rules (no significant yield changes over all tests, $\alpha = 0.01$) was found to be from 5 to 15 inches (instead of the original 5 to 21 inches, Table 1).

With group L_1's final length set at 5 to 15 inches, the four remaining length group's sizes were readjusted. Two length groups (L_2 and L_3) were made 18 inches and two length groups (L_4 and L_5) 17 inches so as to have only integer lengths for the groups. Table 3 shows the intermediate part group matrix after length L_1 was found to range from 5 to 15 inches. Note that all part groups' part quantity requirements have been recalculated using Araman et al.'s (1982) data.

Using the part groups shown in Table 3, testing was resumed on group L_2. This group required six tests before the requirement that yield differences associated with the five different length and width setting for the group were not significantly different with α set at 0.01. The individual results for each of the six tests are shown in Table 4.

Group L_2's length range decreased from 15 to 33 inches to 15 to 20 inches before all four parameters (Equation 1) were no longer statistically different ($\alpha = 0.01$). The yield span decreased considerably over these six tests. For the first test, when group L_2's length range was 15 to 33 inches, the yield span was almost 11 percent, but it was only 2.27 percent when L_2's length range was finally reduced to 15 to 20 inches, part group L_2W_2's final length range.

All the tests for the remaining length groups (i.e. L_3, L_4, and L_5) were conducted in the same way as the ones shown for group L_2. As expected, the lengths of these remaining three length groups were found to be longer than the length range found for L_2. The ranges for these groups were found to be 20 to 35 (L_3), 35 to 60 (L_4), and 60 to 85 inches (L_5, see Table 5).

The range of the part groups in width, as was detected through iterative testing for width, was more evenly distributed than the ranges found for length. The four width groups' width ranges were found to be 1.00 to 2.00, 2.00 to 3.00, 3.00 to 3.75, and 3.75 to 4.75 inches, for width groups W_1, W_2, W_3, and W_4, respectively. With these width group sizes, no width group's level of significance was below the threshold of 0.01.

TABLE 3. *Part groups with part quantities before resuming testing for group L_2.*

	Length (inch)				
Width (inch)	$5 = <L_1 <= 15$ [10.0]	$15 < L_2 <= 33$ [24.0]	$33 < L_3 <= 51$ [42.0]	$51 < L_4 <= 68$ [59.5]	$68 < L_5 <= 85$ [76.5]
$1.00 = <W_1 < 2.00$ [1.50]	L_1W_1 {4.0%}	L_2W_1 {20.3%}	L_3W_1 {6.8%}	L_4W_1 {3.1%}	L_5W_1 {1.7%
$2.00 = <W_2 < 3.00$ [2.50]	L_1W_2 {4.5%}	L_2W_2 {22.2%}	L_3W_2 {6.4%}	L_4W_2 {3.6%}	L_5W_2 {1.5%
$3.00 = <W_3 < 4.00$ [3.50]	L_1W_3 {1.8%}	L_2W_3 {8.6%}	L_3W_3 {4.0%}	L_4W_3 {1.2%}	L_5W_3 {1.4%
$4.00 = <W_4 <= 4.75$ [4.25]	L_1W_4 {1.0%}	L_2W_4 {5.0%}	L_3W_4 {2.1%}	L_4W_4 {0.3%}	L_5W_4 {0.4%

TABLE 4. *Summary of testing length group L_2, levels of significance (p-values) and yield span.*

Test #	1	2	3	4	5	6
Test for	Length group 15–33 in.	Length group 15–30 in.	Length group 15–28 in.	Length group 15–25 in.	Length group 15–23 in.	Length group 15–20 in.
Length	0.0001	0.0001	0.0001	0.0001	0.0002	0.1542
Width	0.2886	0.1465	0.0146	0.7005	0.1161	0.2314
Interaction	0.1251	0.0139	0.2611	0.3424	0.4749	0.1027
Curve	0.0224	0.0392	0.0103	0.0009	0.0126	0.0474
Yield-span	10.91%	9.36%	8.41%	5.51%	5.84%	2.27%

TABLE 5. *Final part groups with its associated part quantities in percent in parentheses.*

	Length (inch)				
Width (inch)	$5 = <L_1 < 15$ [10.0]	$15 = <L_2 < 20$ [17.5]	$20 = <L_3 < 35$ [27.5]	$35 = <L_4 < 60$ [47.5]	$60 = <L_5 <= 85$ [72.5]
$1.00 = <W_1 < 2.00$ [2.00]	L_1W_1 {4.0%}	L_2W_1 {8.8%}	L_3W_1 {12.9%}	L_4W_1 {7.2%}	L_5W_1 {3.1%}
$2.00 = <W_2 < 3.00$ [3.00]	L_1W_2 {4.5%}	L_2W_2 {8.9%}	L_3W_2 {14.2%}	L_4W_2 {7.8%}	L_5W_2 {2.9%}
$3.00 = <W_3 < 3.75$ [3.75]	L_1W_3 {1.4%}	L_2W_3 {3.0%}	L_3W_3 {4.3%}	L_4W_3 {2.6%}	L_5W_3 {1.7%}
$3.75 = <W_4 <= 4.75$ [4.25]	L_1W_4 {1.5%}	L_2W_4 {3.0%}	L_3W_4 {4.7%}	L_4W_4 {2.5%}	L_5W_4 {1.2%}

Surprisingly, the widest width group (W_4) was not the narrowest one; rather it was width group W_3, which was 0.25 inches smaller than the other three. Despite being the narrowest width group, its level of significance was found to be 0.0115, which is barely above the threshold value of 0.01. As was found with length, there seems to be a width range that is more influential on yield than others.

After completing this series of tests, the final part group matrix was a five by four matrix with 20 part groups. The range of the length groups differed from 5 inches (L_2) to 25 inches in length (L_4 and L_5). One width group's range was 0.75 inch (W_3) while the other three had width ranges of 1.00 inch (W_1, W_2, and W_3). The final part group distribution with its associated part quantities based on Araman et al. (1982) is shown in Table 5.

DISCUSSION

The 5 by 4 part group matrix shown in Table 5 is the smallest part group matrix that is able to satisfy the yield-influence requirement set forth in the Hypothesis (level of significance $\alpha \geq 0.01$). A smaller matrix, for example a 4 by 3 matrix, results in yield differences that are significant ($\alpha < 0.01$). From an analytical standpoint, a smaller part group matrix would have facilitated the statistical analysis of the cutting bill-yield relationship. However, the potential error associated with larger part groups would have made the results less representative. Therefore, the 5 by 4 part group matrix is the smallest solution to the part group formation problem satisfying the requirements.

The part groups obtained are of different sizes (Table 5). The length range of group L_2 is five inches, whereas the length range of groups L_4 and L_5 is 25 inches. However, all three groups conform to the maximum level of influence on yield as required by the procedure. Two reasons contribute to these differences in part group size: 1) the part geometry, and 2) the part quantities that are required for a particular size. This is consistent with the findings by Buehlmann et al. (2003) that yield from a specific cutting bill is not only dependent on the size of the parts (i.e. the part geometry) and the distribution of the part sizes over the entire cutting bill size range but also on the part quantities and part quantity distribution. Length range L_2, 15 to 20 inches, requires the highest part quantity per unit length. This length range requires, on average, 4.74 percent of all parts per one-inch part length, whereas over the entire length range from 5 to 85 inches, each one-inch length increment re-

quires only 1.25 percent of the total part quantity (100 percent quantity/80 inches), on average. Thus, part quantity plays a role in the determination of the degree to which group size influences yield (Buehlmann 1998; Buehlmann et al. 2003).

Figure 3 displays the results obtained during the derivation of length group L_2. Of particular interest is the part quantity (right y-axis) versus the level of significance (left y-axis) plot over the length range (x-axis). As part quantity and length range decrease, statistical significance approaches the threshold value of $\alpha = 0.01$. The lower boundary for length group L_2 was 15 inches (found by establishing length group L1), whereas the upper boundary was initially set at 33 inches but reached 20 inches to meet the yield influence requirements. In particular, Fig. 3 shows the length range of length group L_2 for all six tests (x-axis), as well as the part quantity required (right y-axis) and the level of significance for length width, length * width interaction, and curve (left y-axis). Note that the scale used on the left y-axis in Fig. 3 is logarithmic.

As can be seen in Fig. 3, as the length range and part quantity for length group L_2 decline, the level of significance for the tests decreases, especially so for the test of significance for length which starts below $p = 0.0001$ (highly significant) when the length for group L_2 was 25 inches to $p = 0.15$ (not significant) when the upper bound is reduced to 20 inches. Similarly, the magnitude of the yield span (e.g. the difference between the maximum and the minimum yield result for each test sequence within a part group) decreased with declining length range and part quantity (Fig. 3). When the length range for group L_2 was 20 inches at the beginning of the test series (with lower and upper bounds of 15 and 35 inches, respectively), the measured yield span was 12.79 percent. When the length range was reduced to 5 inches (15 to 20 inches), the yield span was reduced to 2.67 percent.

If the length of the upper bound of group L_2 decreased without a corresponding decrease in part quantity, the trends shown would be the same, but the decrease in significance of the length factor and the decrease of yield span would be less profound. How much of the decreasing influence on yield is attributable to the decreases in the length range of the part group and how much to the decrease in part quantity requirements was not explored in this study. Based on Buehlmann et al. (2003), the yield variance attributable to the reduction in the length range may account for only a minor portion of the effect.

The variability in the results obtained between the two replicates for each test also has an influence on the size of the effect. The effect size of curvature (curve, Fig. 3) between tests for different length ranges for group L_2, did not continuously increase with decreasing group length. For example, when observing the results from

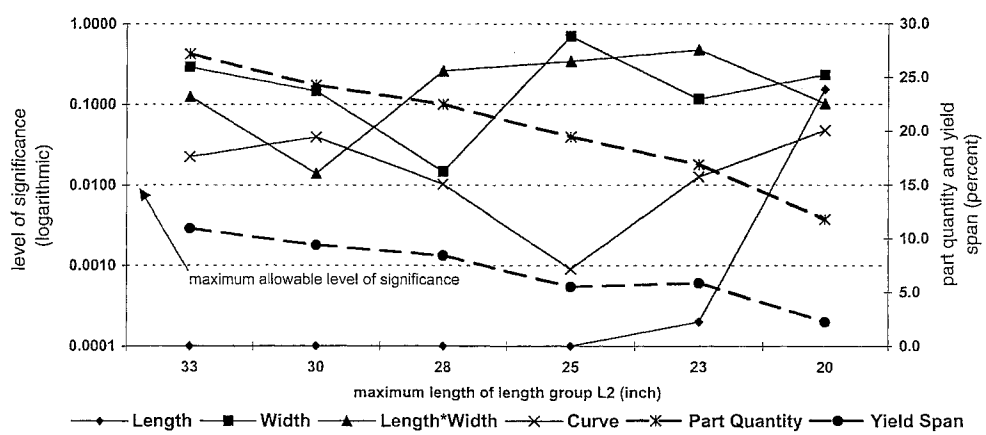

FIG. 3. Maximum length, part quantity, and resulting levels of significance for several factors when length group L_2 is manipulated to determine the maximal length of part group L_2.

the six tests necessary to establish length group L_2, the yield for individual tests observed for test three (L_2 length range 15–28 inches) and test four (L_2 length range 15–25 inches) was similar. However, the level of significance for curvature for tests three ($p = 0.0103$) and four ($p = 0.0009$) was different. A portion of this difference in levels of significance between tests three and four can be explained by the differences in variability within replicates for each test. For test three, the average standard deviation within replicates was found to be 1.00 percent, whereas for test four the average standard deviation was 0.47 percent, or only half the value of test three. The highly significant term for curvature for test four can therefore partially be attributed to the lower standard deviation between replicates. Thus, the level of significance a particular test achieves is not only a function of the yield difference observed within a test but also is dependent on the variability between the replicates since the observed variance is a variable.

Therefore, the measure used to establish the part group sizes in this study also was dependent on the standard deviation. However, since the tests to establish the part group sizes not only change the midpoint position of the part group under consideration but also the part group midpoints in the same row and column, the yield differences obtained for different positions of the part group midpoint (e.g. the actual part size used for defining part size) were quite large. For this reason, the sizes established can be assumed to reflect the true influence on yield of individual part groups.

Future research will have to validate the cutting bill framework established in this study by investigating the influence on yield of changing an individual part group's midpoint to the part group extreme geometrical positions (e.g. the part group's corner points) while leaving the remaining 19 part sizes unchanged. The problem with such a set-up is that an additional part size is added to the cutting bill, which by itself changes the resulting yield (Thomas and Brown 2003). The most revealing tests for validating the standardized cutting bill, however, will be to use industrial cutting bills and cluster their parts according to the part group framework. Even if the yield for the original, industrial cutting bill and the yield for the same cutting bill clustered to the part groups differ, the standardized cutting bill will still represent a good average representation of cutting bills used in the furniture and related industries.

The main reason to create the standardized, simplified cutting bill presented in this paper was the desire to find a way to better understand cutting bill requirements—yield relationships when cutting lumber. Future research employing the cutting bill will reveal if this goal has become achievable thanks to this work. Should this effort succeed, a large number of important questions relating to lumber cut-up in rip-first rough mills may be better understood. Such an achievement could lead to significant raw material and cost savings. However, the standardized cutting bill may prove helpful for other uses, too. One area of potential is yield estimation. Yield estimation based on simulation is time-consuming. Existing yield estimators based on yield nomograms are inaccurate (Hoff 2000; Buehlmann et al. 1998b; Manalan et al. 1980). Buehlmann et al. (1998b) have shown that yield estimates obtained through simulation (ROMI-RIP 1.0, Thomas 1996a) and through yield nomograms (FPL 118, Englerth and Schumann 1969) can differ more than 10 percent. Thomas and Buehlmann (2002) validated ROMI-RIP and showed that these simulation-based yield results are a reasonable representation of real operations; thus the larger part of the estimation differences seems to come from the yield nomograms. Manalan et al. (1980) set the upper limit for estimation errors at 19 percent (Manalan et al. 1980). There is a potential that the simplified cutting bill developed in this study may lead to a simple yield estimator based on least squares, neural networks, or fuzzy systems, to name a few.

Nonetheless, one has to be aware that the concept of part groups is an artificial construct that can mimic "real" cutting bills only to a certain degree. Cutting bills whose part-size distribution is concentrated over a narrow range of sizes, or cutting bills whose quantity requirements for

one part is dominant, will defy the concept of part groups. Still, the concept allows making observations regarding the complex relationship between cutting bill requirements and lumber yield. However, a thorough validation of the standardized cutting bill developed in this study is necessary. Nonetheless, the cutting bill developed in this study has already been used in other studies (Buehlmann et al. 2004; Zuo et al. 200x; Zuo et al. 2004, among others) and has been referred to as the "Buehlmann" cutting bill.

CONCLUSIONS

Part groups, a theoretical concept, can be used to standardize cutting bills such that their complexity for analytical purposes decreases. The concept rests on the assumption that required part sizes within defined size limits can be clustered into one part size without having a larger than defined (acceptable) influence on yield. To this end, the ranges of sizes of part groups have to be set through iterative testing to limit the influence of part clustering on lumber yield.

For this research, cutting bill part sizes were limited to 5 to 85 inches in length and 1.00 to 4.75 inches in width. This geometrical space was divided into five even-length groups (each 16 inches in length) and four width groups (three 1.00 inch and one 0.75 inch in width), forming a five by four matrix containing 20 part groups. Iterative testing to assure any yield changes occurring due to changes of part size within part groups were not significant, was used to establish the 20 part group sizes.

This procedure resulted in part groups of variable size, especially in length. The part group with the smallest length range was 5 inches, whereas the longest part group length range was 25 inches. Two reasons are thought to be responsible for this result. First, lengths in the range around 20 inches are important determinants of yield since they use the available clear areas in boards effectively (Buehlmann 1998; Buehlmann et al. 2003). Second, a large percentage of parts, as required by the typical cutting bill used in industry (Araman et al. 1982) require lengths around 20 inches (Buehlmann 1998). Part quantity, as Buehlmann et al. (2003) showed, is a major determinant of the effect on yield of a given part size.

The simplified, standardized cutting bill created by this study may, once validated, prove helpful for gaining additional insights into the complex relationship between cutting bill requirements and yield. This cutting bill may also prove useful for purposes of creating a yield estimator that does not rely on simulation techniques and is more reliable than yield nomograms.

ACKNOWLEDGMENTS

This research was supported by the National Research Initiative (NRI) Competitive Grants Program and the USDA Forest Service, Princeton WV Research Station. The authors also would like to thank two anonymous reviewers for their valuable suggestions.

REFERENCES

ANDERSON, J. D., C. D. BRUNNER, AND A. G. MARISTANY. 1992. Effect of sawing stages on fixed-width, fixed-length dimension yield. Forest Prod. J. 42(11/12):74–78.

ARAMAN, P. A. 1982. Rough-part sizes needed from lumber for manufacturing furniture and kitchen cabinets. Research Paper NE-503. USDA Forest Service, Northeastern Forest Experiment Station, Broomall, PA.

———, C. J. GATCHELL, AND H. W. REYNOLDS. 1982. Meeting the solid wood needs of the furniture and cabinet industries: standard-size hardwood blanks. Research Paper NE-494. USDA Forest Service, Northeastern Forest Experiment Station, Broomall, PA.

BC WOOD SPECIALTIES GROUP. 1996. The technology of computerized cut-off saws: A buyer's guide. The Brandon P. Hodges Productivity Center, Raleigh, NC, for BC Wood Specialties Group, Surrey, BC, Canada.

BRUNNER, C. C., M. S. WHITE, F. M. LAMB, AND J. G. SCHROEDER. 1989. CORY: A computer program for determining dimension stock yields. Forest Prod. J. 39(2): 23–24.

BUEHLMANN, U. 1998. Understanding the relationship of lumber yield and cutting bill requirements: A statistical approach: Doctoral dissertation, Virginia Polytechnic Institute and State University, Blacksburg, VA. URL: http://scholar.lib.vt.edu/theses/available/etd-91298-173331/

———, J. K. WIEDENBECK, AND D. E. KLINE. 1998a. Character-marked furniture: Potential for lumber yield increase in rip-first rough mills. Forest Prod. J. 48(4):43–50.

———, D. E. KLINE, AND J. K. WIEDENBECK. 1998b. Understanding the relationship of lumber yield and cutting bill

requirements: A statistical approach to the rough mill yield estimation problem. Annual Meeting of the Forest Products Society. Technical Session Presentation, Merida Mexico, June 23, 1998.

———, J. K. WIEDENBECK, AND D. E. KLINE. 1999. Character-marked furniture: Potential for lumber yield increase in crosscut-first rough mills. Forest Prod. J. 49(2):65–72.

———, ———, AND ———. 2003. Influence of cutting bill requirements on lumber yield in a rip-first rough mill. Wood Fiber Sci. 35(2):187–200.

———, X. ZUO, AND R. E. THOMAS. 2004. Linear programming and optimizing lumber quality composition in secondary hardwood dimension mills. Journal of Engineering Manufacture, Proceedings of the Institution of Mechanical Engineers Part B, Short Communications in Manufacture & Design. Issue B1, Volume 2004:135–141.

CARON, M. 2003. Comparaison de l'optimisation selon le prix et selon le rendement matière dans les usines de débitage de composants de bois franc. Mèmoire de Maîtrise. Université Laval. Québec, Canada.

ENGLERTH, G. H., AND D. R. SCHUMANN. 1969. Charts for calculating dimension yields from hard maple lumber. Research Paper FPL 118. USDA Forest Service, Forest Products Laboratory, Madison, WI.

GATCHELL, C. J., R. E. THOMAS, AND E. S. WALKER. 1998. 1998 Data bank for kiln-dried red oak lumber. Research Paper NE-245. USDA Forest Service, Northeastern Forest Experiment Station, Radnor, PA.

HANSEN, E., V. S. REDDY, J. PUNCHES, AND R. BUSH. 1995. Wood materials use in the U.S. furniture industry: 1993 and 1995. Center for Forest Products Marketing, Virginia Polytechnic Institute and State University, Blacksburg, VA.

HARDING, O. V., AND P. STEELE. 1997. RIP-X: Decision software to compare crosscut and rip-first rough mill systems. Wood Sci. Technol. 31(5):367–381.

HOFF, K. 2000. Limitations of lumber-yield nomograms for predicting lumber requirements. General Technical Report NE-270. USDA Forest Service, Northeastern Forest Experiment Station, Newton Square, PA. 8 pp.

LUPPOLD, W. G. 1993. Decade of change in the hardwood industry. Pages 11–24 in Proc. Twenty-first Annual Hardwood Symposium of the Hardwood Research Council.

MANALAN, B. A., G. R. WELLS, AND H. A. CORE. 1980. Yield deviations in hardwood dimension stock cutting bills. Forest Prod. J. 40(1):40–42.

MEYER, C. J., J. H. MICHAEL, S. A. SINCLAIR, AND W. G. LUPPOLD. 1992. Wood material use in the U.S. wood furniture industry. Forest Prod. J. 42(5):28–30.

MONTGOMERY, D. C. 2005. Design and analysis of experiments. 6th edition. John Wiley & Sons, Inc. Hoboken, NJ. 660 pp.

REYNOLDS, H., AND C. CHELL. 1982. New technology for low-grade hardwood utilization: System 6. Research Paper NE-504. USDA Forest Service, Northeastern Forest Experiment Station, Broomall, PA. 8 pp.

SINCLAIR, S. A., R. J. BUSH, AND P. A. ARAMAN. 1989. Marketing hardwoods to furniture producers. Pages 113–119 in Seventeenth Annual Hardwood Symposium of the Hardwood Research Council.

STEELE, P. H., AND O. V. HARDING. 1991. RIP-X user's manual. MS Forest Products Utilization Laboratory. Decision Software Series 3. Mississippi State University, Starkville, MS.

THOMAS, R. E. 1995a. ROMI RIP: ROugh MIll RIP-first simulator user's guide. General Technical Report NE-202. USDA Forest Service, Northeastern Forest Experiment Station, Radnor, PA.

———. 1995b. ROMI RIP: ROugh MIll RIP-first simulator. General Technical Report NE-206. USDA Forest Service, Northeastern Forest Experiment Station, Radnor, PA.

———. 1996a. ROMI RIP: An analysis tool for rip-first rough-mill operations. Forest Prod. J. 46(2):57–60.

———. 1996b. Prioritizing parts from cutting bills when gang-ripping first. Forest Prod. J. 46(10):61–66.

———. 1997. ROMI-CROSS: An analysis tool for crosscut-first rough mill operations. Forest Prod. J. 48(2):68–72.

———, AND J. BROWN. 2003. Determining the impact of sorting capacity on rip-fist rough mill yield. Forest Prod. J. 53(7):54–60.

———, AND U. BUEHLMANN. 2002. Validation of the ROMI-RIP Rough Mill Simulator. Forest Prod. J. 52(2):23–29.

———, AND ———. 2003. Performance review of the ROMI-RIP Rough Mill Simulator. Forest Prod. J. 53(3): 80–85.

———, AND J. M. WEISS. 2006. Rough mill simulator version 3.0: An analysis tool for refining rough mill operations. Forest Prod. J. 56(5):53–58.

WEISS, J. M., AND R. E. THOMAS. 2005. ROMI-3: ROugh MIll simulator 3.0 user's guide. Gen. Tech. Rep. NE-328. U.S. Department of Agriculture, Forest Service, Northeastern Research Station. Newtown Square, PA.

WENGERT, E. M., AND F. M. LAMB. 1994. A handbook for improving quality and efficiency in rough mill operations: practical guidelines, examples, and ideas. R. C. Byrd Hardwood Technology Center, Princeton, WV.

WIEDENBECK, J. K. 1992. The potential for short length lumber in the furniture and cabinet industries. Ph.D. dissertation, Virginia Polytechnic Institute and State University. Blacksburg, VA.

———, J. BROWN, N. BENNETT, AND E. RAST. 2003. Hardwood lumber widths and grades used by the furniture and cabinet industries: Results of a 14-mill survey. Forest Prod. J. 53(4):72–80.

ZUO, X., U. BUEHLMANN, AND R. E. THOMAS. 200x. Cost minimization through optimized lumber quality composition. European Journal of Operations Research (EJOR). (in review).

———, ———, AND ———. 2004. Investigating the linearity assumption used for solving the least-cost grade mix problem. Wood Fiber Sci. 36(4):547–559.